CATALOG I DIMENSIONAL METROLOGY

Mahr

EXACTLY

Mahr

DIMENSIONAL METROLOGY

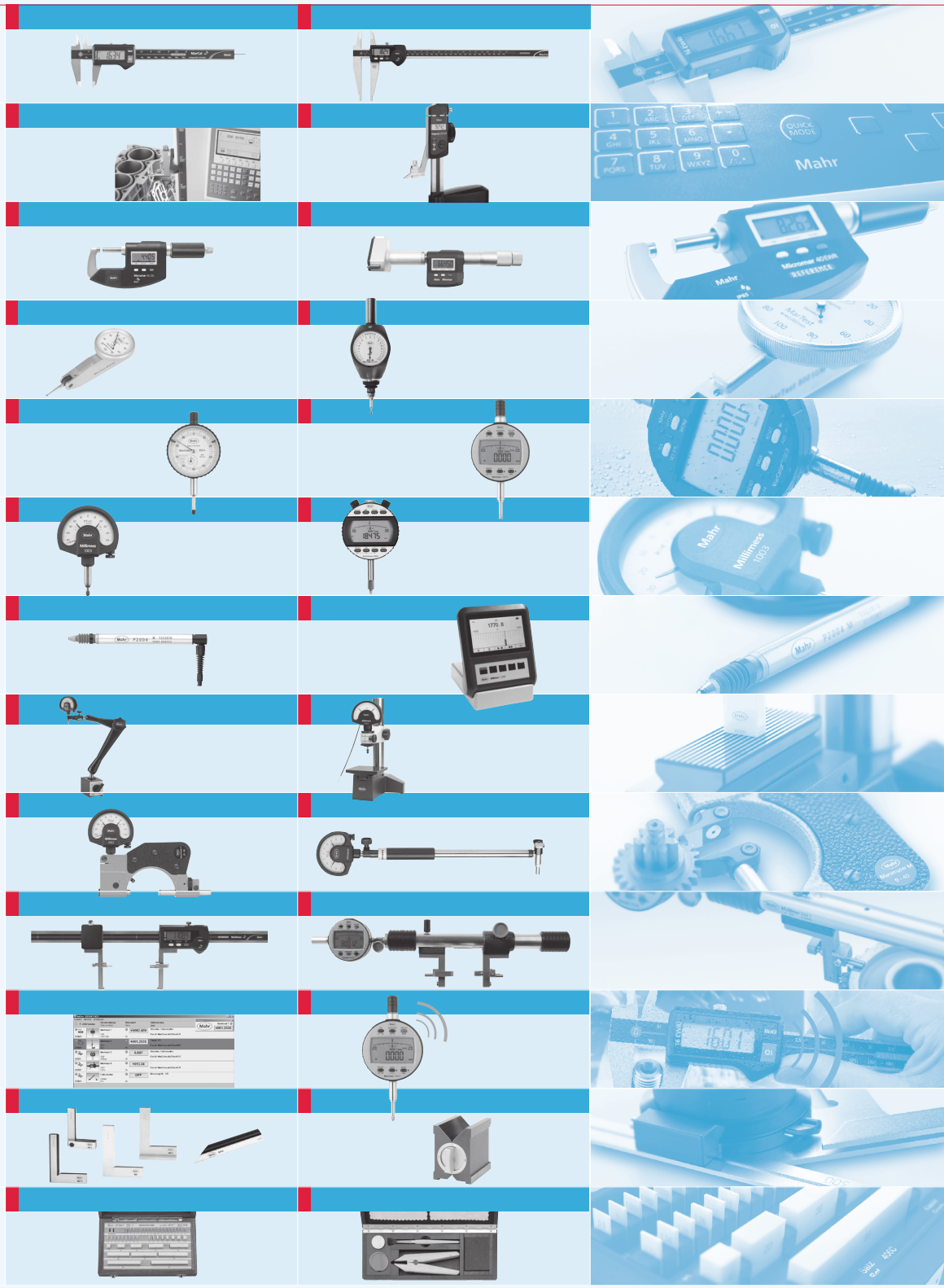

Contents

MarCal	Calipers	**1- 2**
Digimar	Height Measuring Instruments	**2- 2**
Micromar	Micrometers	**3- 2**
MarTest	Test Indicators / 3D Touch Probes	**4- 2**
MarCator	Digital / Dial Indicators	**5- 2**
Millimess	Digital / Dial Comparators	**6- 2**
Millimar	Electrical Length Measuring Instruments / Air Gaging	**7- 2**
MarStand	Indicator Stands / Comparator Stands	**8- 2**
MaraMeter	Indicating Measuring Instruments	**9- 2**
Multimar	Universal Measuring Instruments	**10- 2**
MarConnect	Interfaces / Data Processing	**11- 2**
MarTool	Measuring and Inspection Equipment	**12- 2**
MarGage	Standards, Gages and Gage Blocks	**13- 2**

ACCURACY IN THE NANOMETER RANGE USED TO BE A UTOPIAN IDEAL ... **AND THEN THERE WAS PRECIMAR**

The latest information on PRECIMAR products can be found on our website:
www.mahr.com, WebCode 20581, 20584, 20587

► | The Precimar range specializes in high-precision dimensional metrology for absolute and relative measurements. Typical applications include products and test equipment for the aerospace and automotive industries and series testing of test equipment in calibration laboratories. Various universal length measuring machines enable the reliable measurement and testing of lengths, inside and outside diameters, cylindrical and conical threads, plain tapers, micrometers, snap gages, dial indicators, dial comparators, probes, gage blocks and precision products, right down to the nanometer range. Mahr also offers special measuring instruments for dial indicators, dial comparators, probes and gage blocks. | ◄

► | Precimar. Precision Length Metrology

Precimar Dial Indicator Testing Instruments 14- 2
Precimar Optimar 100.
Universal Dial Indicator Testing Machine 14- 3

Precimar for Gage Block Metrology 14- 4
Precimar 130B-24, 130B-16. Gage Block Comparators 14- 4
Precimar 826 PC. Gage Block Comparator 14- 5

Precimar for Workshop Length Metrology 14- 6
Precimar LINEAR 100.
Universal Single-Axis Length Measuring Unit 14- 7
Precimar LINEAR Serie.
Universal Single-Axis Length Measuring and Setting Unit 14- 7

Precimar for Calibration Metrology 14- 8
Precimar ULM 300-E / 600-E / 1000-E / 1500-E
Universal Length Measuring Machines 14- 8
Precimar ULM 520 S-E / 1000 S-E.
Universal Length Measuring Machines
with large direct measuring range 14- 9
Precimar ULM 800 L-E / 1500 L-E.
Universal Length Measuring Machines with Laser System 14-10

Precimar for Precision Length Metrology 14-11
Precimar PLM 600-E.
Universal Length Measuring Machine 14-11
Precimar 828 CiM 1000.
Precision Length Measuring Unit 14-12

Data Overview
All precision length measuring machines 14-13

Request catalog

Precimar. Dial Indicator Testing Instruments

SEMI- AND FULLY AUTOMATED TESTING OF MEASURING EQUIPMENT WITH DISPLAYS

► I Dial indicator testing instruments from Mahr ensure efficient and precise metrology. These instruments provide absolute measurements for dial indicators, dial comparators, lever-type test indicators, inside micrometers and inductive and incremental probes. Typical applications include dial indicator testing in all branches of industry, inspection rooms, calibration laboratories and series testing by dial indicator manufacturers. With the Optimar 100, Mahr offers a practical solution for both cost-effective, semi-automated testing of analog dial indicators and efficient, fully automated testing of digital measuring equipment. I ◄

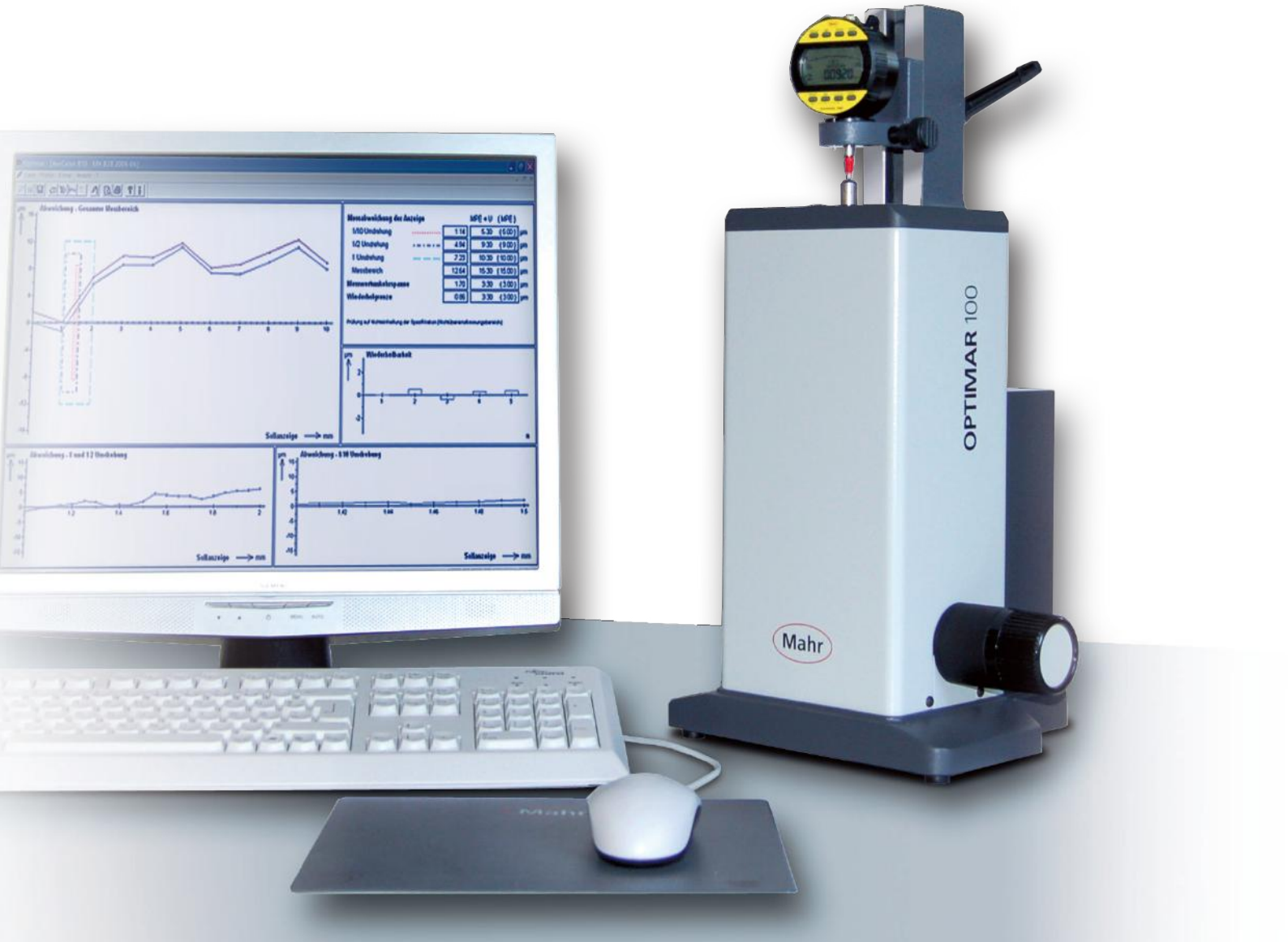

Precimar Optimar 100. Universal Deal Indicator Testing Instrument

Description

The cost-effective testing station for semi- or fully automated testing of dial indicators, dial comparators, lever-type test indicators, 2-point inside measuring devices, and inductive and incremental probes.

Designed as a table-top unit, the **OPTIMAR 100** is user-friendly and ensures fast test runs. It features a motorized drive and is equipped with a high-resolution measuring system. The test run is software-controlled.

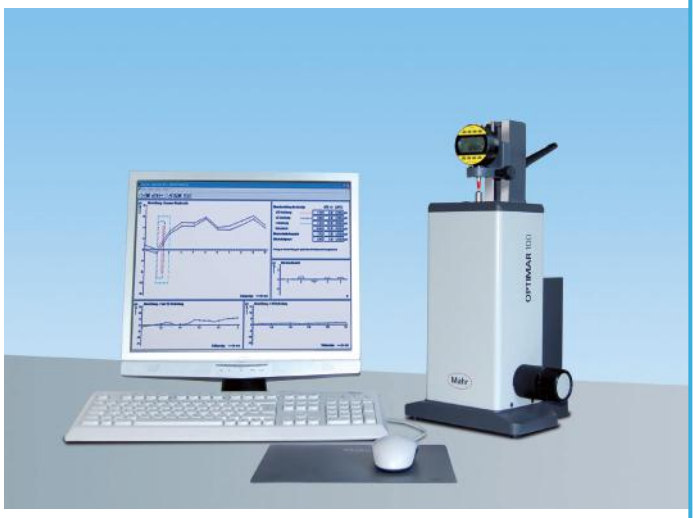

Features

- For dial indicators, dial comparators, lever-type test indicators, 2-point inside measuring devices, digital dial indicators and inductive and incremental probes
- Automation of sub-processes (automated pre-positioning) using motorized measuring spindle drive
- Fully automated measuring run for digital devices
- **OPTIMAR 100** may be used horizontally (e.g. for measuring inside micrometers)
- Testpiece mounting via vertical guide. Height can be adjusted quickly (adaptation of testpieces to different measuring ranges)
- Box-shaped and thus rigid machine casing
- For testpieces with a shaft diameter of 8 mm, 28 mm or 3/8"
- Electronic handwheel for manual control of the measuring spindle's movement. Self-adjusting sensitivity of the electronic handwheel for adaptation to the specific test specimen
- Ergonomic design of all control elements
- Compliance with the Abbe comparator principle for maximum measuring accuracy
- LIF 101 measuring system with computer-aided error compensation. Testing of 2-point inside measuring devices without loss of accuracy
- Length measuring deviation in vertical and horizontal directions: MPE = (0.2 + L/250) µm*, L in mm at T = 20 °C ±0.5 °C, permissible temperature gradient 0.1 K/h
- **Mahr software** or **QMSOFT software**

** for serial no. 2041/11 and higher*

Application

- For both analog dial indicators, dial comparators, lever-type test indicators and 2-point inside measuring devices and digital dial indicators and inductive and incremental probes.

Request catalog or see WebCode 2421

Accessories

- Mount for lever-type test indicators
- Large selection of adapters for digital dial indicators and inductive and incremental probes
- Please ask for customized adapters if required
- Probe can be connected to Optimar via probe box
- Holder and software for testing 2-point inside measuring devices with a movable meausing bolt (tesing as per VDI/VDE/DGQ 2618, sheet 13.2., 2005)
- Device for force sensor on request
- **OPTIMAR** recalibrated on site by Mahr Service Center (standard or DAkkS/DKD Certificate)
- Calibration set for calibration by the operator

Technical Data

Optimar 100	**Order No. 5320005**
Range of measuring spindle	100 mm, 4 in (101.6 mm)
Measuring system	LIF 101 with correction of measured values
Digital increment	0.02 µm (0.8 µin)
Length measuring deviation (MPE)	(0.2 + L/250) µm*, (L in mm)
Positioning speed	Max. 2 mm/s (0.08 in/s)
Positioning	
Pre-positioning:	Automatic
Fine positioning:	Electronic knob
Supply voltage	Via plug-in power supply unit 110/230 V/9 V AC, 18 VA
Dimensions (L x W x H)	235 mm x 216 mm x 480 mm (9.3 in x 8.5 in x 18.9 in)

** for serial no. 2041/11 and higher*

Precimar. Gage Block Tester 130B-24, 16

Now even better: Models 130B-24 and 130B-16.
Gage block comparators

Description

The **130B-24** gage block comparator from **Mahr Federal** is the preferred choice of many major calibration laboratories. It is specifically designed for comparative gage block measurements. The **130B-24** model measures the industry's key dimensional standards with the ultimate in resolution and reproducibility.

Features

- A unique "floating measuring frame" ensures precise point-to-point measurement
- Single-sensor design minimizes electronic noise
- Finely balanced system optimizes control of measuring forces
- Resolution of 0.1 µin (0.001 µm)
- Reproducibility of 0.2 µin (0.005 µm) (6σ < 1 µin/0.025 µm)
- Measuring capacity of 0.010 in to 4 in (0.25 mm to 100 mm)
- Integrated measuring software and user interface
- Built-in positioner for reproducible measuring positions

Gage block positioner
An accurate positioner is built into the platen of the **130B-24**. The reference gage block and the testpiece gage block are loaded into the openings in the template. The device swivels between the contact points and positions the gage blocks – first the reference gage block and then the testpiece gage block in its reference position and in the corners of the gage block. Three easily exchangeable templates are included, one for square and two for rectangular (30 mm and 35 mm/1.18 in and 1.38 in) gage blocks.

Other templates are available as optional extras. The positioner is suitable for gage blocks from 0.20 in (0.5 mm) to 4 in (100 mm) long. It can be fitted for right- or left-handed users or removed completely if necessary. An acrylic breath shield is included to protect the measuring area against body heat. Please see our special brochure for further information on the **software**.

Technical Data 130B-24 / 130B-16

Size (without computer)	Approx. 15 in x 15 in x 23 in (385 mm x 385 mm x 590 mm)
Weight (without computer)	Approx. 225 lbs (100 kg)
Max. gage block length	0.010 in to 4 in (0.25 mm to 100 mm)
Measuring force	
(upper contact)	3 oz (0.8 N)
(lower contact)	1 oz (0.3 N)
Contact tip material	Tungsten carbide (diamond - optional)
Contact tip radius	0.125 in (3.175 mm)
Sensor range	± 0.015 in (± 0.38 mm)
Measuring range	± 500 µin (±10.0 µm)
Reproducibility	6 σ < 1 µin (25 nm) measured on a 1 in gage block without removing the gage block
Linearity	Deviation <1 µin over the central ± 50 µin and <1 µin in any 50 µin within the ± 500 µin measuring range < 20 nm over the central ± 1.0 µm and < 20 nm in any ± 1.0 µm over a measuring range of ±10.0 µm

Precimar 130B-16

Model 130B-16 for longer gage blocks

The same highly linear, stable electronics as the 130B-24

Designed for gage blocks of up to 600 mm (24 in) but can also measure shorter blocks.

Approx. size (without computer)
385 mm x 385 mm x 1,016 mm
(15 in x 15 in x 40 in)
Approx. weight (without CPU)
140 kg (309 lbs)
Measuring length
2.5 mm to 600 mm (0.10 in to 23.6 in)
Measuring force
(upper probe) 4 oz., 1.1 N
(lower probe) 2 oz., 0.6 N

All other data as for the **130B-24**.

Request catalog or see WebCode 10259.

Precimar 826 PC Gage Block Measuring Unit

Description

The **826 PC** gage block measuring unit is fast, reliable and extremely precise. In comparative measurement, it achieves a reproducibility of 0.01 µm.

An open and extremely rigid L-shaped stand forms the basis for the two opposing high-precision probes, and the perfectly level measuring table.

Work is made easy thanks to straightforward one-handed operation for manipulating reference and test gage blocks on the measuring table. The open design allows visual contact during testing.

The user is able to view the measuring process at all times which helps to ensure a unique level of process reliability.

Two professional measuring and evaluation programs (software) meet all the needs of internal gageblock tests, calibration laboratories and gageblock manufacturers.

The **826** enables quick and straightforward high-precision testing of European and US gage blocks up to 170 mm (6.69 in) long in accordance with ISO 3650.

Features

- Rigid cast-iron stand ensures a stable temperature and insensitivity to heat
- Easily adjustable vertical slide with upper probe
- Very ergonomic and convenient one-handed operation for positioning the gage block under the probe
- Fine adjustment via rigidly connected parallelogram springs
- Electropneumatic lifting of the probes
- Extremely smooth manipulator operation thanks to high-precision ball bushings
- Measurement not influenced by manual force applied
- Gage blocks easy to move on the measuring table thanks to round, hardened high-precision support pins
- No zero point setting required, since the set value is offset by the stored actual allowance of the respective reference gage block
- Very effective protection from heat due to an acrylic glass screen along the sides of the unit
- Flattening correction
- Correction of differing coefficients of thermal expansion
- Calculation of mean values

Technical Data

826 gage block measuring unit Order No. 4448003

Application range	0.5 mm to 170 mm (0.02 in to 6.69 in)
Usable table surface	60 mm x 55 mm (2.36 in x 2.17 in)
Reproducibility	± 0.01 µm (0.4 µin)
Stylus ball radius, upper probe	1.5 mm (0.06 in)
Stylus radius, lower probe	1.5 mm (0.06 in)
Direct measuring range	0.2 mm (0.0008 in)
Weight	37 kg (81.6 lbs)

For testing gage blocks over 170 mm long (central length lm) we recommend the **ULM**, **828 CiM** or **PLM** universal measuring machines.

Request catalog or see WebCode 2335

Accessories

- **QMSOFT® / QM-Block** for calibration and management of gage blocks and gage block sets
- The evaluation software operable under Microsoft Windows® 7
- Very effective protection from heat due to an acrylic glass screen along the sides of the unit
- Lifting device 826 Va HS for the fast and quiet pneumatic lifting of the inductive probes via footswitch.
- Temperature compensation
- Wooden tongs, pneumatic gage block lifter, optical flat, surface thermometer

Precimar. Length Measuring Machines for Every Area of Use

► I Length metrology is used today in the most different areas. The LINEAR length measuring units are ideal for use as setting and adjusting instruments in the manufacturing environment. The well-established ULM universal length measuring instruments are standard quality assurance instruments in industrial manufacturing environments and reference instruments for gage and test equipment calibration. They are also used for high-precision length measurements on precision parts. The motorized PLM and CIM units enable operator-friendly, fast and reliable measurements with the smallest uncertainty. Typical applications include precision parts and test equipment. With an extensive selection of products ranging from the straightforward LINEAR to the ULM instruments to the ulta-precise, semi-automated CiM universal length measuring machine, Mahr offers practical solutions for manufacturing environments, inspection rooms and calibration laboratories. In other words, high-precision metrology with extremely efficient measurement processes. I ◄

Precimar LINEAR 100 for Workshop Length Metrology

Description

Linear 100 is a universal, user-freindly length measuring instrument for rapid, precise internal and external measurements up to 100 mm (4 in), directly in the manufacturing environment. The unit's simple design makes it possible to carry out measurements in no time at all and adapt quickly to new measurement tasks.

Features

- Damped measuring spindle with 2 pre-selectable measuring forces
- Measuring force remains virtually constant over the entire measuring range
- Direct measuring range of 50 mm
- Integrated measuring system based on the Abbe principle
- Infinitely adjustable measuring tables for precise measuring position adjustment
- Combined internal/external measurement possible without recalibration
- Solid cast body to avoid stresses and twisting errors from the outset
- MarCheck measuring value display with 2 channels (optionally with stand)
- MarCheck with RS 232 interface, for easy transfer of measured values to PCs.

Universal single-axis length measuring unit

Request brochure or see WebCode 12282

Precimar LINEAR Serie

Description

The **LINEAR** length measuring instruments from **Mahr** are ideal for use as setting and adjusting instruments in the manufacturing environment. They allow precise setting of internal and external comparators, 2-point inside measuring devices, indicating snap gages and many other measuring devices.

Features / Applications

- Setting measuring instruments with displays such as the Multimar 844 T
- Setting two-point internal measuring instruments such as the Multimar 844 N
- Setting indicator snap gages such as MaraMeter 840 F
- Testing and checking setting external micrometers
  Checking setting dimensions, pins etc.
- Checking calipers
- Testing and setting inside micrometers
- Measuring cylindrical parts
- Measuring internal dimensions and bores, etc.

Versions

LINEAR 800
LINEAR 1200
LINEAR 2000

Universal single-axis length measuring and setting instruments

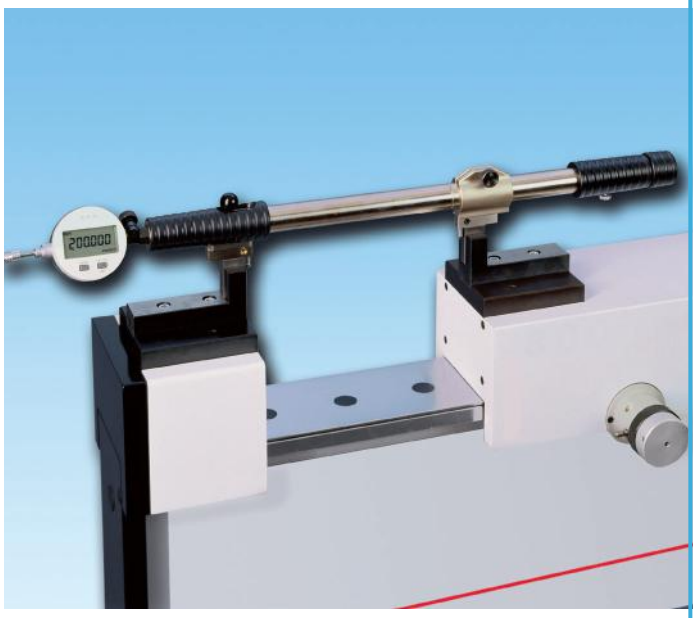

Request brochure or see WebCode 12283

Precimar ULM 300-E / 600-E / 1000-E / 1500-E for Calibration Metrology

Universal length measuring machines

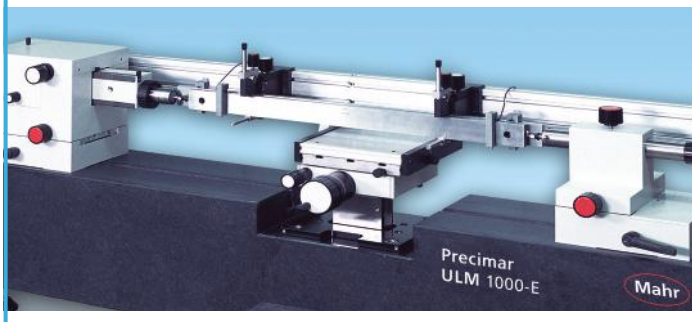

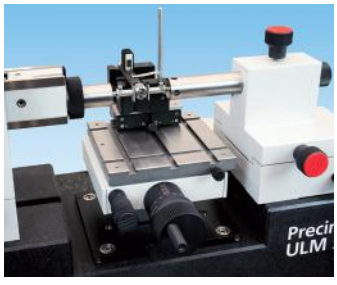

Description

Model
Comparator with horizontal base (highly homogeneous and rigid granite)

Measuring system

X-axis:	Incremental, high-precision Heidenhain length measuring system, 100 mm (4 in) long
Z-axis	Incremental high-precision RENISHAW length measuring system, 80 mm (3.15 in) long

Drives

X-axis:	Manual movement and fine motion control
Y-axis:	Micrometer, 25 mm (0.98 in) (analog or digital)
Z-axis:	Permanent field motor for motorized adjustment of object table height with ergonomic manual control panel

Measuring force generation
Mechanical using weights

Operation
- Measuring spindle, manual
- Air bearings make it very easy to position the measuring element and counter-bearing (not with ULM 300-E)
- Height of object table can be adjusted using buttons (also positioning of given increments)

Features

- Excellent measuring accuracy
- 100% compliance with Abbe comparator principle
- Online temperature measurement with 2 to 3 sensors
- Computer-aided correction of systematic machine errors (CAA)
- Computer-aided stabilization of instrument zero point
- Computer-aided correction of temperature and measuring force influences
- Measuring force remains constant over the entire measuring spindle adjustment range
- Large object table (load capacity 25 kg (55 lbs)) guided with high precision in the Z-direction
- Automatic reversal point recognition for static and dynamic measured value acquisition
- Inside thread measurement is supported by automatic Z-positioning
- Great flexibility in the application range
- Large number of modular accessory sets and components to solve the most diverse measurement tasks, including threads, tapers, taper threads and gears
- Measuring and evaluation software **Mahr 828 WIN** operable under Microsoft Windows®
- Possible to use measuring axis risers

Details on metrological accessories are available on request.

Versions

ULM 300-E
ULM 600-E
ULM 1000-E
ULM 1500-E

Request brochure or see WebCode 10454

Precimar ULM 520 S-E / 1000 S-E for Calibration Metrology

Description

Model
Comparator with horizontal base (highly homogeneous and rigid granite)

Measuring system

X-axis:	In the measuring element, incremental high-precision Heidenhain length measuring system, 100 mm (4 in) long; in the base, incremental Heidenhain reflected light measuring systems over entire length of base to left and right of object table
Z-axis:	Incremental high-precision RENISHAW length measuring system, 80 mm (3.15 in) long

Drives

X-axis:	Manual movement and fine motion control
Y-axis:	Micrometer, 25 mm (0.98 in) (analog or digital)
Z-axis:	Permanent field motor for motorized adjustment of object table height with ergonomic manual control panel

Measuring force generation
Mechanical using weights

Operation
- Measuring spindle, manual
- Air bearings make it very easy to position the measuring element and counter-bearing
- Height of object table can be adjusted using buttons (also positioning of given increments)

Features

- Combined measuring instrument for very high-precision measurements in the range up to 100 mm (4 in) and standard-precision measurements over the entire range of movement of the measuring element and counter-bearing. X measured value formed from the measuring systems of the measuring element and the base
- Particularly recommended for measurements on large testpieces, but also suitable for measurements on smaller testpieces
- Online temperature measurement with 3 sensors
- Computer-aided stabilization of instrument zero point and correction of systematic machine errors (CAA)
- Measuring force remains constant over the entire measuring spindle adjustment range
- Computer-aided correction of temperature and measuring force influences
- Large object table (load capacity 25 kg (55 lbs)) guided with high precision in the Z-direction
- Large number of modular accessory sets and components to solve the most diverse measurement tasks, including threads, tapers, taper threads, gears and ball faces
- Measuring and evaluation software **Mahr 828 WIN** operable under Microsoft Windows®

Large universal length measuring instruments with large direct measuring range

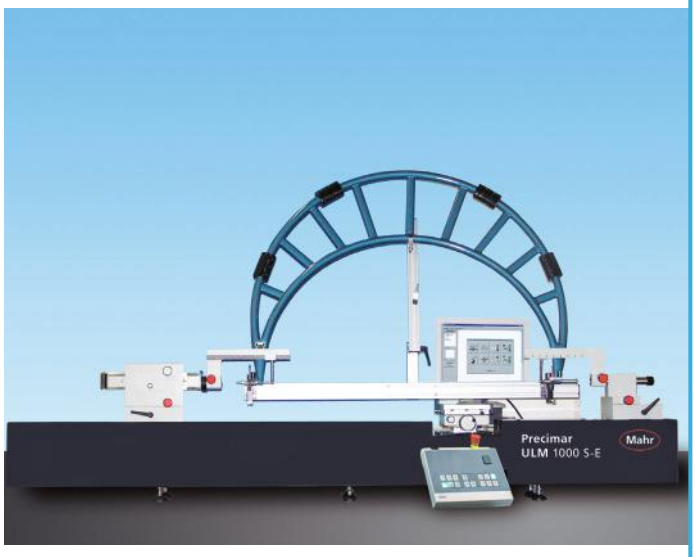

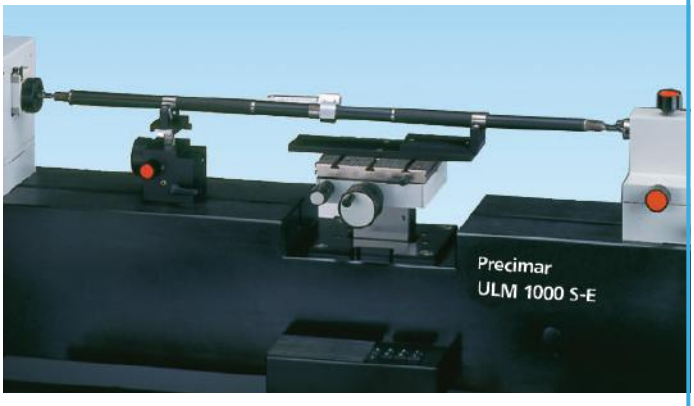

Versions

ULM 520 S-E
ULM 1000 S-E

Request brochure or see WebCode 10455

Precimar ULM 800 L-E / 1500 L-E for Calibration Metrology

Universal length measuring instrument with laser measuring system

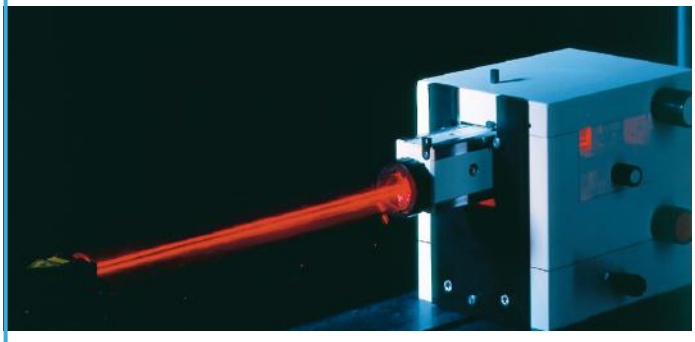

Description

Model
Comparator with horizontal base (highly homogeneous and rigid granite)

Measuring system

X-axis:	Interferential laser measuring system, 525/1,115 mm (20.67/43.90 in) long
Z-axis:	Incremental high-precision RENISHAW length measuring system, 80 mm (3.15 in) long

Drives

X-axis:	Manual movement and fine motion control
Y-axis:	Micrometer, 25 mm (0.98 in) (analog or digital)
Z-axis:	Permanent field motor for motorized adjustment of object table height with ergonomic manual control panel

Measuring force generation
Mechanical using weights

Operation
- Measuring spindle, manual
- Air bearings make it very easy to position the measuring element (with laser reflector) and counter-bearing
- Height of object table can be adjusted using buttons (also positioning of given increments)

Features

- A high-end length measuring instrument with a large direct measuring range
- 100% compliance with Abbe comparator principle
- Correction of laser in terms of environmental influences such as temperature and air pressure (humidity optional)
- Separate laser generating unit outside the measuring instrument and supply by means of light-conducting cable plus laser unit cover
- Computer-aided stabilization of instrument zero point and correction of systematic machine errors (CAA)
- Online temperature measurement and computer-aided correction of temperature and measuring force influences
- Measuring force remains constant over the entire measuring spindle adjustment range
- Large object table (load capacity 25 kg) guided with high precision in the Z-direction
- Automatic reversal point recognition for static and dynamic measured value acquisition
- Very flexible application range (both the very smallest and large testpieces can be measured)
- Large number of modular accessory sets and components to solve the most diverse measurement tasks, including threads, tapers, taper threads and gears

Main areas of application

For the calibration of
- Plain plug and ring gages
- Setting rings
- Snap gages
- Spherical gages, gages for deep bores
- Gage blocks
- Thread gages
- Taper thread gages
- Gear tooth gages
- Dial indicators
- Dial comparators
- 2-point inside measuring devices
- Micrometers

Versions

ULM 800 L-E
ULM 1500 L-E

Request brochure or see WebCode 10456

Precimar PLM 600-E for Precision Length Metrology

Description

Design
Comparator according to Ernst Abbe with horizontal base (highly homogeneous and rigid granite)

Measuring system

X axis	incremental, high-precision Heidenhain length measuring system, 200 mm long
Z axis	incremental measuring system, 100 mm long

Drives

X axis	motor-controlled measuring slide and automatic contacting
TY axis	motorized Y adjustment (25 mm) manual and automatic/CNC-controlled
TZ axis	motorized height adjustment of work table manual and automatic/CNC-controlled
TB axis	motorized tilting axis

Measuring force generation
Electronically controlled measuring force generation

Operation
- Measuring spindle motorized via joystick as well as automatic contacting
- Measuring slide and tailstock are easily positionable due to air bearing
- Motorized height, horizontal and tilt adjustment of object table via joystick, handwheel, function keys or CNC-controlled

Features

- The **Precimar PLM 600-E** has a large universal object table with 5 axes with a loading capacity of 35 kg, a modern PC-based, multi-axis machine control, including PC workstation and **828 WIN** "Free measurement" basic software
- Automatic detection of outer and inner measurements and computer-aided search for reversal points
- Simple operating procedure by means of measuring force-adjusted and joystick-controlled measuring slides with progressive deflection characteristic and automatic contact detection
- Motorized measuring slide allows for high travel speeds
- CNC-controlled motorized vertical movement of the universal measuring table for highly efficient measurement
- State-of-the-art machine control (MarEcon)
- Measuring data recording, processing, logging and transfer via powerful software and menu-driven controls
- Software compensation of thermal dimensional deviations
- Easy setting of measuring force via software
- Aerostatic guides for all slides mounted on the machine bed ensure low measuring uncertainties
- Electronic measuring force adjustment and automatic contacting
- Subjective influences are largely eliminated and unintended collisions with the testpiece avoided
- Automatic bore and inner thread measurement
- Automatic TY-adjustment: Unique is that a manual TY adjustment is still possible
- Motorized tilting axis (TB) can be adjusted using the manual control panel or the 828 WIN software
- A factory calibration or DAkkS/DKD calibration can be offered together with the Precimar PLM 600-E

Request brochure or see WebCode 20817

Universal length measuring machine

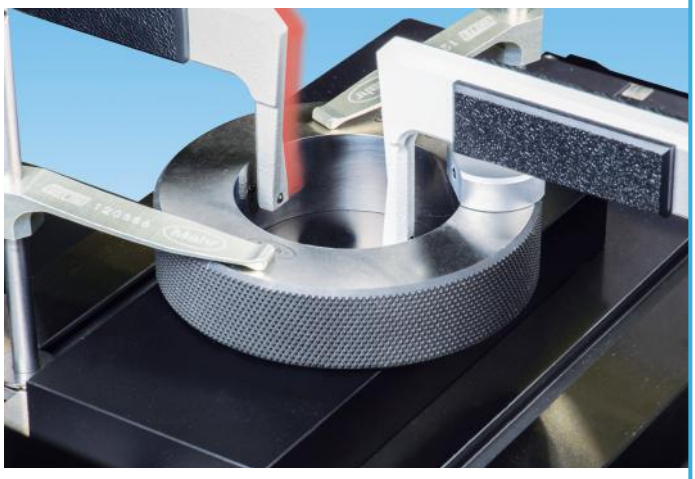

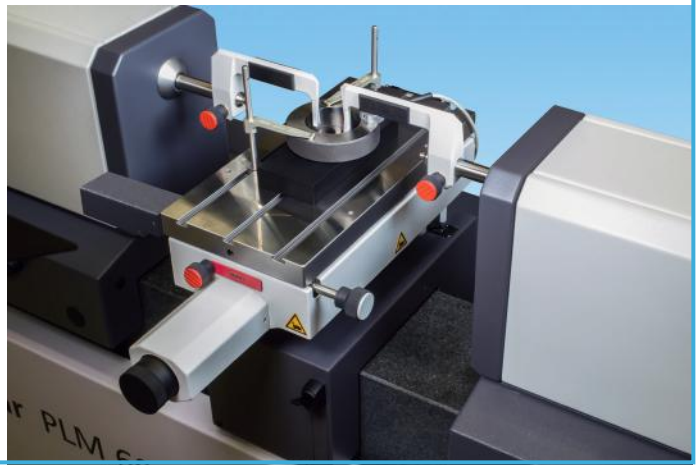

Precimar 828 CiM 1000 for Precision Length Metrology

Precision length measuring machine

Description

Model type
Comparator according to the Abbe principle with horizontal basic bed (highly homogeneous and rigid granite)

Measuring system

X-axis:	High quality, high-precision incremental length measuring system (LIF), 300 mm length
Z-axis:	Incremental Heidenhain illumination system, 70 mm length

Drives

X-axis	Motor-driven measuring slide and automatic contacting
Y-axis:	Micrometer 25 mm (analog or digital)
Z-axis:	motorized adjustment of object table (semi-automatic / CNC-controlled)

Measuring force generation
Electronically controlled measuring force generation

Operation
- Measuring spindle via joystick as well as automatic contacting
- Measuring slide and tailstock are easily positionable due to air-bearings
- Motorized height adjustment of object table using joystick or CNC-controlled

Features

- **Precimar 828 CIM 1000** has the highest measuring accuracy: Unique low length measuring uncertainty for precision products and gage calibration management
- Fast and reliable measurements
- 100% adherence to the comparator principle according to Ernst Abbe
- Online temperature monitoring
- Software-supported mesuring force generation, especially advantageous for thin-walled workpieces and gage calibration devices
- Semi-automatic bore measurement and inside measurement
- High flexibility in the application range
- Numerous accessory sets and components in a modular system to solve different measuring tasks, incl. thread pitch, thread, tapered thread, toothing
- Measuring and evaluation software **Mahr 828 WIN** operable under Microsoft Windows® XP or Microsoft Windows® 7
- Patented measuring procedure
- Minimum measuring uncertainty due to the use of aerostatic guides for all slides supported by the machine bed, the mobile bearing of the measuring spindle over a spring parallelogram which is free of both play and friction, electronic regulation of measuring forces and automatic contacting. Subjective influences are therefore minimized and unintentional collisions with the tespiece prevented

Request brochure or see WebCode 2092.

Precimar Dial Gage Tester

	Optimar 100
Measuring range (mm)	100
Measuring uncertainty MPE_{E1} (µm)	(0.2 + L/250)
Testing direction	vertical und horizontal
Type of operation	semi-automatic, fully-automatic

Precimar Gage Block Testers

	826 PC	130B-24	30B-16
Application range (mm)	0.5 - 170	0.25 - 100	2.5 - 600
Gage blocks	European (rectangular) and US (square)	0.010″ - 4″	0.10″ - 24″
Repeatability (µm)	0.01	6 σ <1 µin (25 nm)	

Precimar Length Measuring Units for Production

	LINEAR 100	LINEAR 800	LINEAR 1200	LINEAR 2000
External measuring range (mm)	0 - 100	0 - 815	0 - 1215	0 - 2015
Internal measuring range (mm)	6 - 100	40 - 855	40 - 1255	40 - 2055
Measuring uncertainty MPE_{E1} (µm)	(0.7 + L/1000)	(0.7 + L/1000)	(0.7 + L/1000)	(0.7 + L/1000)
Type of operation	manual	manual	manual	manual

Precimar Length Measuring Machines for Calibration and Precision Metrology

	ULM Series	PLM 600-E	CiM 1000
External measuring range (mm)	0 - 1620*	0 - 600	0 - 1000
Internal measuring range (mm)	0.5 - 1465*	0.5 - 445	0.5 - 845
Direct meas. span (mm)	100 - 1115*	200	300
Measuring uncertainty MPE_{E1} (µm)	(0.09 + L/2000) or (0.3 + L/1500) ULM L-E: MPE_{E1}= (0.1 + L/2000)	(0.085 + L/1500)	(0.055 + L/1500)
Repeatability (µm)	0.05 / 0.1	<0.05	<0.03
Measuring force (N)	in increments 1 - 11	0 - 13.9 no increments	0 - 13.9 no increments
Object table size (mm)	160 x 160	350 x 150	350 x 150
Object table capacity (N)	250	350	250
Operation type	manual, motorized	motorized, CNC-controlled	motorized, CNC-controlled

** depending upon unit type*